Model Number:

MMP BL58-412K-90V GP52-051

MOTOR LEADS	
LEAD	COLOR
M1	RED
M2	BLACK
M3	WHITE

HALL LEADS	
LEAD	COLOR
H1	BLUE
H2	GREY
H3	VIOLET
VCC	RED
GND	BLACK

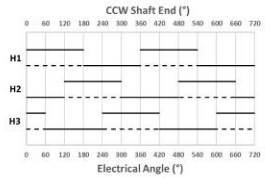

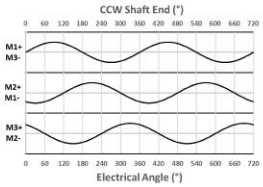

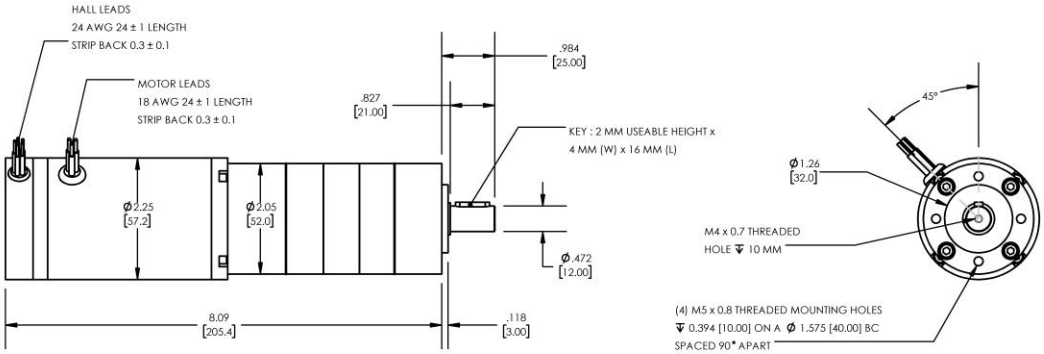

DIMENSIONS ARE INCHES [MM] UNLESS OTHERWISE STATED

PLANETARY GEARMOTOR OUTPUT PARAMETERS:	VALUE	UNITS	TOLERANCE
Gearhead Ratio (exact)	50.89 : 1		
Gearhead Shaft Output Speed (at full-load)	63	RPM	MAX
Gearmotor Rated Continuous Torque	143	In-Lbs	MAX
Gearmotor Rated Peak Torque	355++	In-Lbs	-----
Gearhead Standard Backlash	48	Arc Minutes	MAX
Gearhead Efficiency	70%	-----	-----
Output Shaft Radial Load Capacity	102	Lbs	MAX
Output Shaft Axial Load Capacity	34	Lbs	MAX
Gearmotor Total Weight	3.9	Lbs	MAX

++ All Peak Torque values are dependent upon duty. Contact our sales office for details.

DC MOTOR PERFORMANCE PARAMETERS:	VALUE	UNITS	TOLERANCE
Rated DC Voltage	90	DC VOLTS	-----
Rated Continuous Current	2.53	AMPERES	-----
No-Load Speed	4478	RPM	MAX
Rated Speed	3191	RPM	+/- 15%
Rated Continuous Power Out	151	WATTS	+/- 15%
Rated Continuous Torque	64	OZ-IN	-----
Peak Torque (motor only)	160	OZ-IN	-----
No-Load Current	0.17	AMPERES	MAX
Back EMF Constant (Ke)	20.1	V/KRPM	+/- 10%
Torque Constant (Kt)	27.2	OZ-IN/AMP	+/- 10%
DC Armature Resistance	10.22	OHMS	+/- 15%
Armature Inductance	6.32	mH	+/- 15%
Armature temperature	155	DEG. C	MAX

NOTES:

- ENCODER & BRAKE OPTIONS AVAILABLE – FOLLOW THIS LINK FOR DETAILS
- NEMA MOUNTING FLANGE OPTION AVAILABLE – FOLLOW THIS LINK FOR DETAILS